DESIGN GUIDE

Residential PEX Water Supply Plumbing Systems

Second Edition

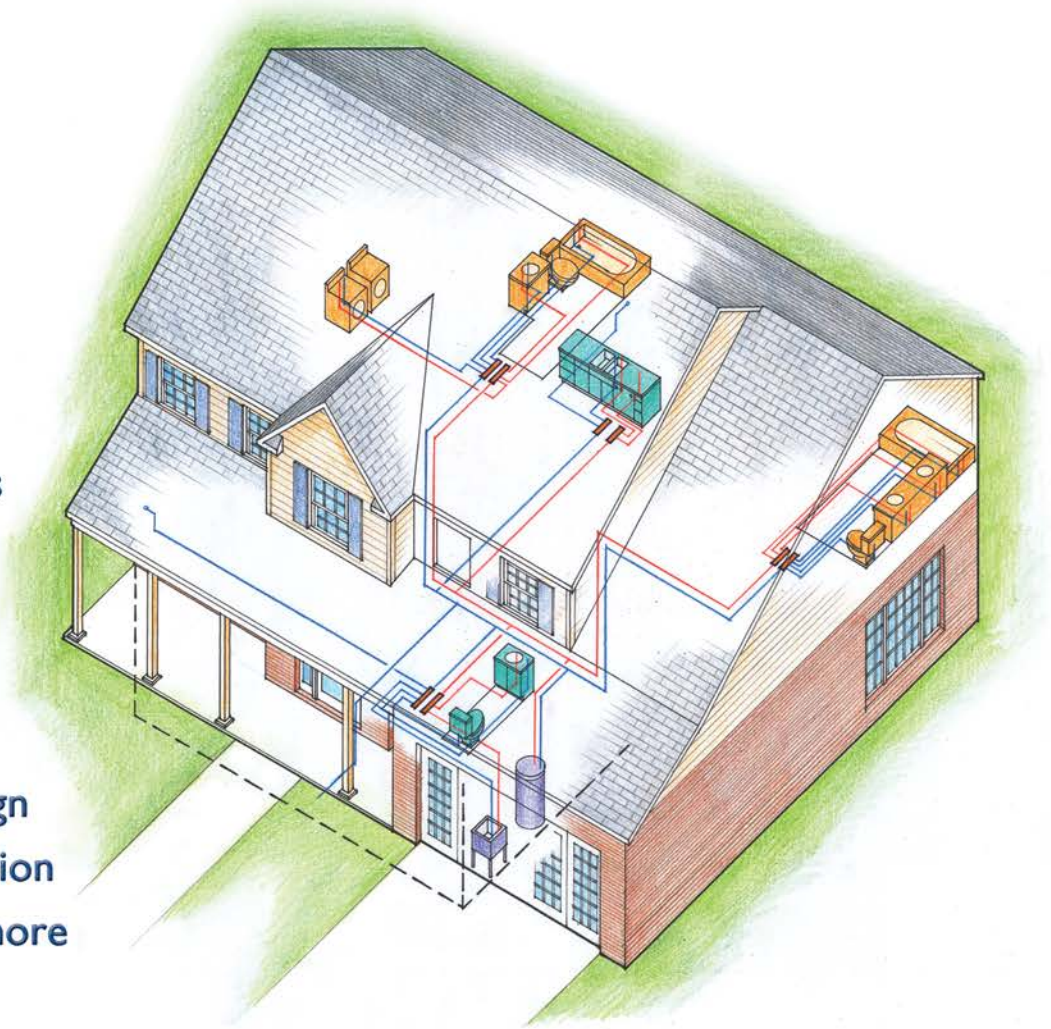

Applications
Advantages
Material Properties
Joining Methods
Code Acceptance
System Design
Installation
and more

PPFA Plastic Pipe and Fittings Association
ICC ES PMG
PLASTICS·PIPE·INSTITUTE™
Home Innovation RESEARCH LABS™

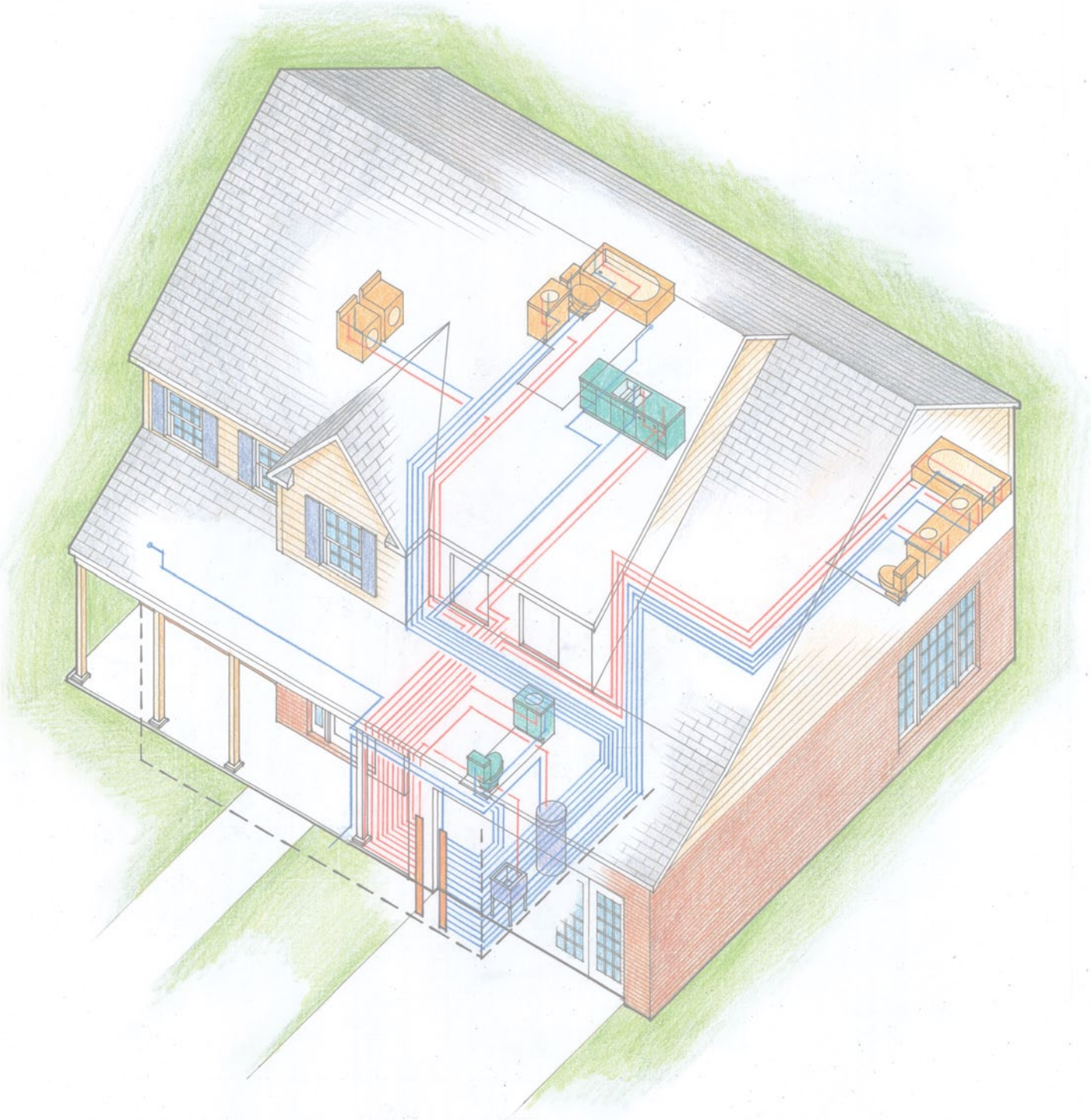

DESIGN GUIDE

Residential PEX Water Supply Plumbing Systems

Second Edition

Prepared for

Plastics Pipe Institute, Inc (PPI)
105 Decker Court
Suite 825
Irving, TX 75062
www.plasticpipe.org

and

Plastic Pipe and Fittings Association

Plastic Pipe and Fittings Association (PPFA)
800 Roosevelt Road, Bldg. C, Ste. 312
Glen Ellyn, IL 60137
www.ppfahome.org

Prepared by

Home Innovation Research Labs
(formerly the NAHB Research Center, Inc.)
400 Prince George's Boulevard
Upper Marlboro, MD 20774
www.HomeInnovation.com

November 2013

This document was developed as the result of a consensus process involving the Plastic Pipe Institute, the Plastic and Plastic Pipe and Fitting Association, and representatives from numerous piping and fitting manufacturers. It was prepared by the Home Innovation Research Labs.

Acknowledgements

We would like to thank the following principal contributors to this Guide:

NIBCO, Inc.
Elkhart, Indiana

Tom Coe

Plastic Pipe and Fittings Association
Glen Ellyn, Illinois

Richard Church, Mike Cudahy

Plastics Pipe Institute
Irving, Texas

Randy Knapp

REHAU, Inc.
Leesburg, Virginia

Lance MacNevin

Uponor
Apple Valley, Minnesota

Kate Olinger, Mike Rivers

Viega, LLC
Wichita, Kansas

Gary Morgan, Christina Smith

Watts
Springfield, Missouri

Chris Haldiman

Zurn Plumbing Products Group
Commerce, Texas

Gary Runyan

ICC – ES
Whittier, California

Maribel Campos

NSF International
Ann Arbor, Michigan

Nasrin Kashefi

Home Innovation Research Labs
Upper Marlboro, Maryland

Joseph Wiehagen

Copyright

Copyright © 2006, revised 2013 Home Innovation Research Labs, Inc., Plastics Pipe Institute, Plastic Pipe and Fittings Association. All rights reserved.

Disclaimer

Neither the Home Innovation Research Labs, Inc., the Plastics Pipe Institute, the Plastic Pipe and Fitting Association, the U.S. Department of Housing and Urban Development, nor any person acting in its behalf, makes any warranty, express or implied, with respect to the use of any information, apparatus, method, or process disclosed in this publication or that such use may not infringe privately owned rights, or assumes any liabilities with respect to the use of, or for damages resulting from the use of, any information, apparatus, method, or process disclosed in this publication, or is responsible for statements made or opinions expressed by individual authors.

For Further Information:

Please consult the following websites for the latest version of this publication. Print on demand version available through ICC ES only.

Plastics Pipe Institute
http://www.plasticpipe.org/

Plastic Pipe and Fittings Association
http://www.ppfahome.org/

Home Innovation Research Labs
http://www.HomeInnovation.com

ICC Evaluation Service, LLC
www.icc-es.org

Table of Contents

List of Figures

List of Tables

7 DESIGN

The unique features of PEX piping allow for a great deal of system design freedom that can increase the performance and savings associated with the plumbing system. In today's high-performance homes, many designers recognize that the plumbing system can be designed to provide hot or cold water faster with much less energy loss. PEX plumbing systems can be designed to enhance these features but, like any plumbing system, PEX piping systems perform best and cost less to install when planned during the home's design phase. Advanced planning allows maximum performance, while limiting the lengths of pipe and number of fittings used. And, when considered early enough in the house planning stage, a few simple room layout considerations can greatly improve the performance of the plumbing system. By consulting the codes and local inspectors in advance, builders and plumbers can also avoid costly time delays due to code issues arising during construction.

This chapter describes a process that provides the guidance and tools needed to successfully layout a PEX piping system in nearly any home. Four major areas of the design process are highlighted:

- **Consult Local Codes**
- **Optimize Home Layout**
- **Select Piping System Type**
- **Plan Piping Routing, Manifold, and Valve Locations**

Consult Local Codes

If PEX piping has not been used before, or is still uncommon in your local area, it is helpful to review the local codes for use of PEX piping. As discussed in the Chapter 4 of this document, PEX piping is approved for use in all model codes. Local amendments may restrict or change

the way PEX may be used for certain applications. For that reason, it is important to consult local codes to determine specific requirements before beginning a new piping design.

It may also be helpful to consult with local building inspectors to notify them in advance that you plan to use PEX piping for your project. They can be helpful in pointing out local requirements and amendments. Alerting the inspector of your intent to use a new technology in advance can help to avoid delays that often occur when an unfamiliar material is encountered on the jobsite. This design manual may be useful as a reference guide for an inspector who is unfamiliar with PEX.

In the event that questions arise regarding the application, performance, or code acceptance of PEX, both the Plastics Pipe Institute (PPI) and the Plastic Pipe and Fittings Association (PPFA) can provide support. Each organization can provide technical and training materials to aid code officials and plumbers.

Optimize Home Designs

Ironically, some of the most substantial problems with modern plumbing system designs, relate not to the piping itself, but to the design and layout of the house. The materials that are chosen for framing, the location of rooms, the location of the water heater(s), and the point at which the water main enters the home all have a substantial impact on the performance of a plumbing system. Often, the design of the plumbing system is left until the end of the design process when the home layout is largely determined. This can result in a poorly performing and excessively costly system. By observing a number of guidelines early in the home design process, PEX piping can be installed in a way that minimizes costs, eases installation, and increases homeowner satisfaction.

The key to optimizing home designs for PEX plumbing is to minimize pipe lengths from the water main and water heater. While this may seem intuitive, it cannot be stressed enough. Short piping runs result in shorter wait times for hot water, fewer fittings, faster installation time, and lower material costs. This can be accomplished by the builder or designer in the early planning stage using several basic design principles.

1. **Group fixtures together –** Grouping plumbing fixtures around a common location can result in saving time, materials, hot water energy, and water. This can be done between floors as well, such as in the case of stacked bathrooms. Where possible, avoid locating bathrooms long distances from the water heater.
2. **Centrally locate distribution point –** Centrally located water heaters and incoming water supplies can significantly improve the performance of a plumbing system. Often water heaters are arbitrarily located for convenience or placed in the utility room as far from the living space as possible. This approach often leads to exceedingly long plumbing runs along with the resultant increase in materials, installation time, and water and energy use. Whenever feasible, locate the water main and heater as close as possible to the mid-point of the fixture groupings to keep piping runs short.
3. **Create spaces for bundled pipe runs –** Particularly applicable to parallel-piping PEX plumbing runs where few fittings are installed, simultaneous installation of multiple piping runs will reduce installation time. The flexibility of PEX piping and the long, unbroken lengths that can be easily spooled enable the simultaneous installation of multiple plumbing lines

running in the same direction using common holes and chases. By creating space in soffits and chases for piping bundles, installation time can be reduced. However, cold and hot water lines should be bundled separately.

4. **Use building elements that ease piping installation –** Using building elements such as open web floor trusses in some locations can dramatically speed up the process of installing plumbing piping. This can also speed up the process of installation of other mechanicals including ducting and wiring.

Select Piping System Design

The next step for the designer, plumber, and builder is to select the most appropriate plumbing system design for the home. The unique properties of PEX piping allow it to be configured in a number of different designs. All have been shown to work well in residential applications, and all are code approved. Depending on the design of the home, each has different performance characteristics, installation costs, material costs, and ease of installation. The selection of a system design is generally based on a combination of key factors such as material cost, labor time, ease of installation, system performance, and installer preference.

The challenge for a plumbing designer is to select the system that balances the unique needs of the installer, homeowner, and builder. The purpose of this chapter is to provide a comparison of the three most prevalent PEX plumbing systems, trunk and branch, parallel, and zone, and the guidance to select between system types.

Selecting among the three systems described is not cut and dry, and often involves a balance of the key factors since each project, installer, and circumstance is different. Fortunately, there is no wrong choice. All three system designs will supply sufficient flow and pressure to the outlets even when the base riser pressure is 40 psi and the length to the farthest outlet is 100 feet. But, the costs and performance of each system do vary for each house design. Selecting the best system for your project can reduce installation costs, minimize installation headaches, and lead to more satisfied homeowners.

To aid in the decision-making process, several tools are provided.

1. **General Rankings of the Systems for Key Factors –** This general comparison will provide a place to start and compare how the systems stack up based on your priorities.
2. **Example Layouts –** Detailed layouts of each system are provided for four common house types. By selecting the type that most closely resembles your project, you can see how the systems compare for your building design.
3. **Performance Testing –** The three systems were compared and tested in comprehensive laboratory tests. By examining the test data you can identify differences in the systems' performance in varying scenarios.
4. **Industry Technical Support –** Manufacturers and organizations offer a range of resources to assist PEX users. The support ranges from general information to technical assistance on specific projects.

General Rankings of the Systems for Key Factors

The general characteristics of the systems are ranked in Table 7.1. Given the wide difference between housing designs and preferences, they may not apply in every situation, but are useful for general guidance as you design your home. The best way to use the table below is to establish the relative priority of key factors, and use the rankings of system designs to provide a starting point for the system to be selected.

For example, if when considering the factors in the table below, you determine that your top three factors are:

1. Minimizing Fittings and Joints[5]
2. Centralized Shut-off Valving
3. Pressure Stability with Use of Multiple Fixtures

Then, given the fact that the parallel system ranks at the top of all three, it is a logical place to start. However, if your top factors give you three different best designs, the right choice is not as obvious. You will then need to consider other factors, and further explore the detailed design of your home to make a choice. The example layouts later in this chapter may then be helpful in making a choice.

Table 7.1 – General Rankings of the System Characteristics

Factor	* * *	* *	*
Minimize Pipe Used	Trunk and Branch	Zone	Parallel
Minimize Fittings and Joints	Parallel	Zone	Trunk and Branch
Sequential Flow Hot Water Delivery Time	Trunk and Branch Zone		Parallel
Minimize Hot Water Wait Time	Parallel	Zone	Trunk and Branch
Single Fixture Pressure	Trunk and Branch	Parallel Zone	
Pressure Stability with Use of Multiple Fixtures	Parallel	Zone	Trunk and Branch
Centralize Shut-off Valving	Parallel	Zone	Trunk and Branch
Joint Accessibility During Installation	Parallel	Zone	Trunk and Branch

* * * Indicates the highest level of performance for that factor
* Indicates typical performance

[5] A fitting is the device that allows the PEX pipe to change direction or size (i.e., tees, elbows, reducers). A joint is the connection of the PEX pipe to a fitting (i.e., a tee fitting has three joints).

Cost has been omitted as a factor in this guide. Since local labor costs vary, and there is variation between the fitting and piping costs offered by different manufacturers, this guide simply provides information on the amount of pipe and fittings needed. Since the balance between material and labor cost varies across the country, the determination of actual cost estimates and total cost comparison between system designs is left to the designer or installer.

Example Layouts

The following plumbing system layouts provide supply water diagrams and estimated fittings and piping descriptions for the four most common house types: Colonial, Ranch, Townhouse, and Condominium. Each house type has three piping layouts that illustrate each of the three system designs. Piping lengths, and fitting and joint counts are provided for each system to provide a comparison of material use and labor required. You can select the home design that most closely resembles your home design to help select the system that is right for you. Note that in these designs, few obstructions are accounted for and thus represent idealized pipe runs with a minimum of fittings.

Table 7.2 outlines the number and type of fixtures for each house.

Table 7.2 – Fixture Count for each House Type

Fixture	Colonial	Ranch	Townhouse	Condominium
Kitchen Sink	1	1	1	1
Dishwasher	1	1	1	1
Lavatory	4	3	2	3
Water Closet	3	2	2	2
Shower/Tub	3	3	1	3
Clothes Washer	1	1	1	1
Utility Sink	1	0	0	0
Hose Bibbs	2	2	2	0
Total	**16**	**13**	**10**	**11**

Colonial Layout

The Colonial house layout has approximately 2,000 square feet of floor area. The water main enters the house under the unfinished basement slab. The water heater is located near the main water line in the basement. The first floor has a living room, dining room, kitchen, family room, and a powder room. The second floor has four bedrooms, two full baths, and the clothes washer.

Table 7.3 – Fixture Summary for the Colonial House

Level	Kitchen Sink	Dishwasher	Lavatory	Water Closet	Shower/Tub	Clothes Washer	Utility Sink	Hose Bibb	Total
Basement	0	0	0	0	0	0	1	0	**1**
First Floor	1	1	1	1	0	0	0	2	**6**
Second Floor	0	0	3	2	3	1	0	0	**9**
Total	**1**	**1**	**4**	**3**	**3**	**1**	**1**	**2**	**16**

Table 7.4 – Material Summary for the Colonial House

System	Length of Cold Pipe			Length of Hot Pipe			Fittings		Manifolds/ Multi-port Tees		Joints	
	1"	3/4"	1/2"	1"	3/4"	1/2"	Tees	Elbows	Main	Remote	Fixtures	Piping
Trunk and Branch	27'	80'	110'	0'	80'	98'	25	10	0	0	26	97
Parallel	33'	12'	602'	0'	12'	428'	2	7	2	0	26	49
Zone	27'	93'	152'	0'	93'	107'	8	13	0	7	26	83

In larger homes with a large separation between bathrooms, the trunk and branch design uses the least amount of total pipe but the most fittings and joints. The parallel system uses the most piping (2.4 times on average) and the least amount of fittings and joints. While the parallel system uses more piping, the piping has a smaller diameter which is easier to handle and install, particularly around bends. An appropriate balance between labor and material costs as well as the relative performance of the systems is important when deciding on a system layout for your particular house.

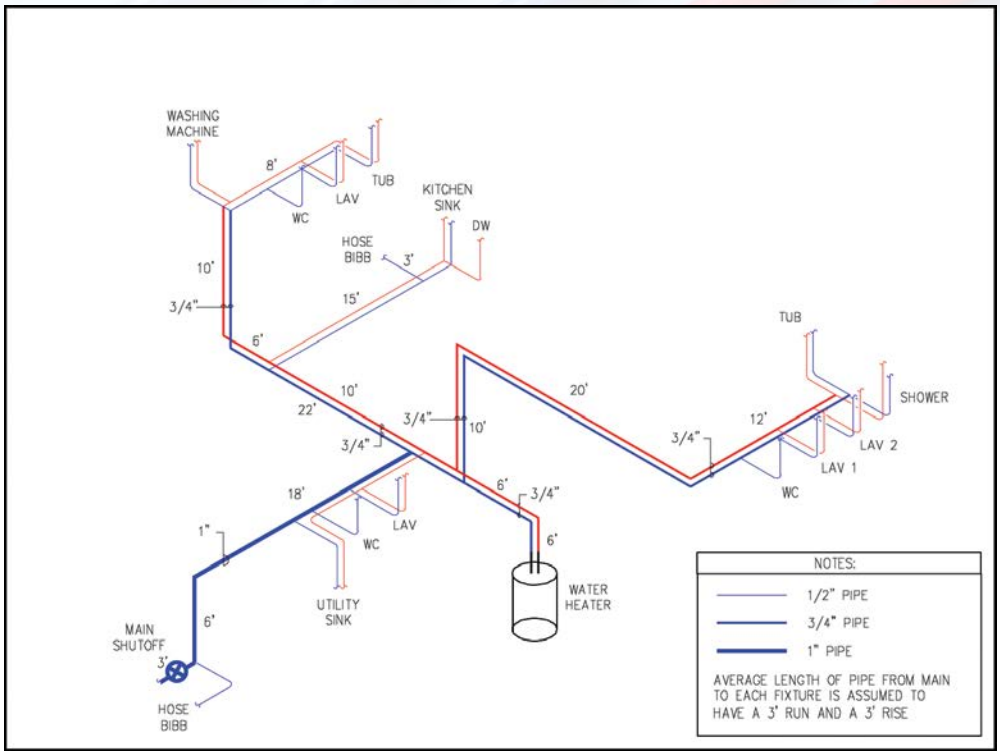

Figure 7.1 – Trunk and Branch Isometric Riser for the Colonial House

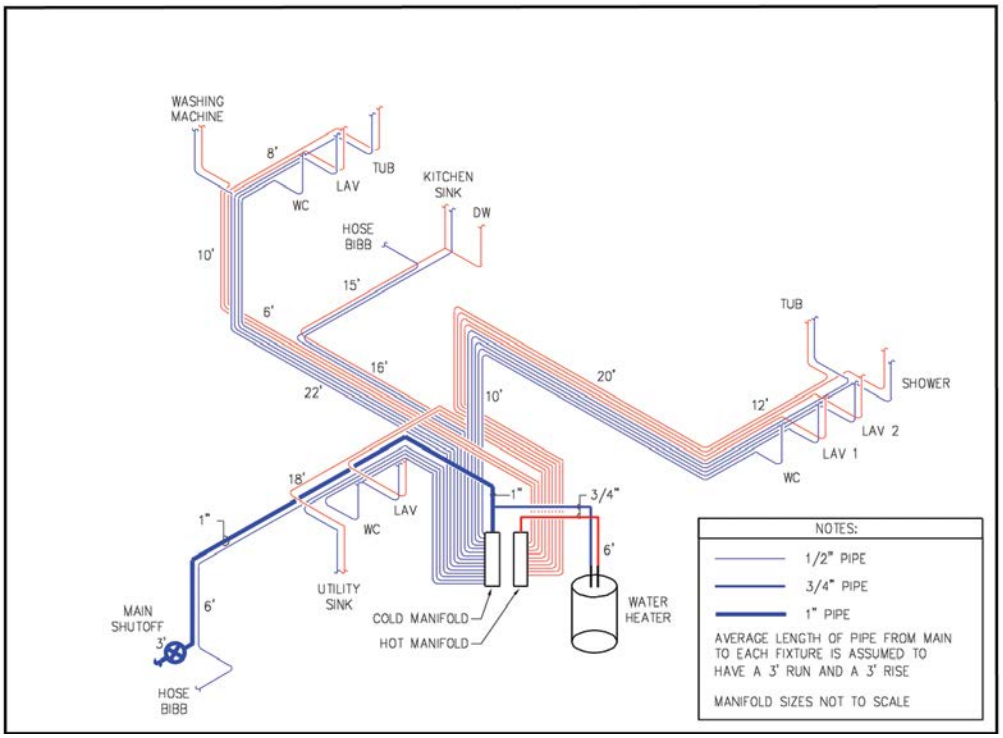

Figure 7.2 – Parallel Isometric Riser for the Colonial House

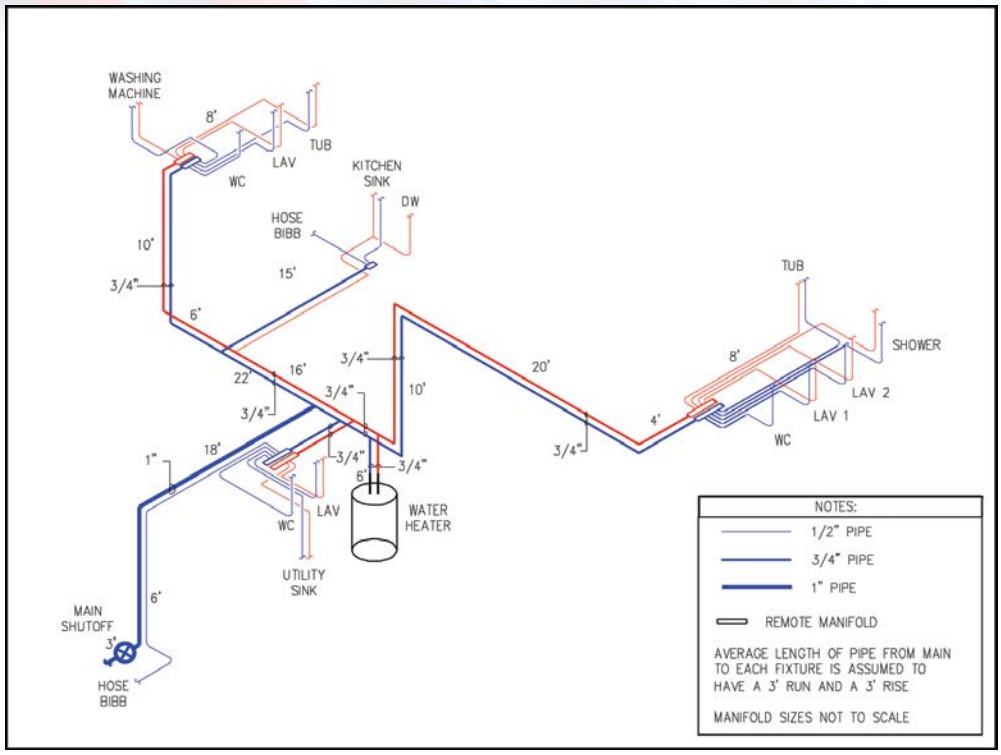

Figure 7.3 – Zone Isometric Riser for the Colonial House

Ranch Layout

The Ranch house has approximately 1,300 square feet of one-story floor area. The water main enters the house under the slab on grade. The one-story floor plan includes a great room, a kitchen, a dining room, three bedrooms, and two full baths. The water heater and clothes washer are located in the utility room.

Table 7.5 – Fixture Summary for the Ranch House

Level	Kitchen Sink	Dishwasher	Lavatory	Water Closet	Shower/Tub	Clothes Washer	Utility Sink	Hose Bibb	Total
Main Floor	1	1	3	2	3	1	0	2	**13**

Table 7.6 – Material Summary for the Ranch House

System	Length of Cold Pipe			Length of Hot Pipe			Fittings		Manifolds/ Multi-port Tees		Joints	
	1"	3/4"	1/2"	1"	3/4"	1/2"	Tees	Elbows	Main	Remote	Fixtures	Piping
Trunk and Branch	25'	75'	112'	0'	72'	81'	20	5	0	0	21	71
Parallel	25'	10'	413'	0'	10'	294'	2	5	2	0	21	39
Zone	25'	59'	196'	0'	59'	159'	8	4	0	4	21	53

In home layouts with a large separation between fixtures, the trunk and branch design uses the least amount of pipe followed by the zone design. The parallel system uses the most piping (1.8 times more on average) and the least amount of fittings and joints. The parallel system uses more piping, but with smaller diameters, which is easier to handle and install, particularly around bends. An appropriate balance between labor and material costs as well as the relative performance of the systems is important when deciding on a system layout for your particular house.

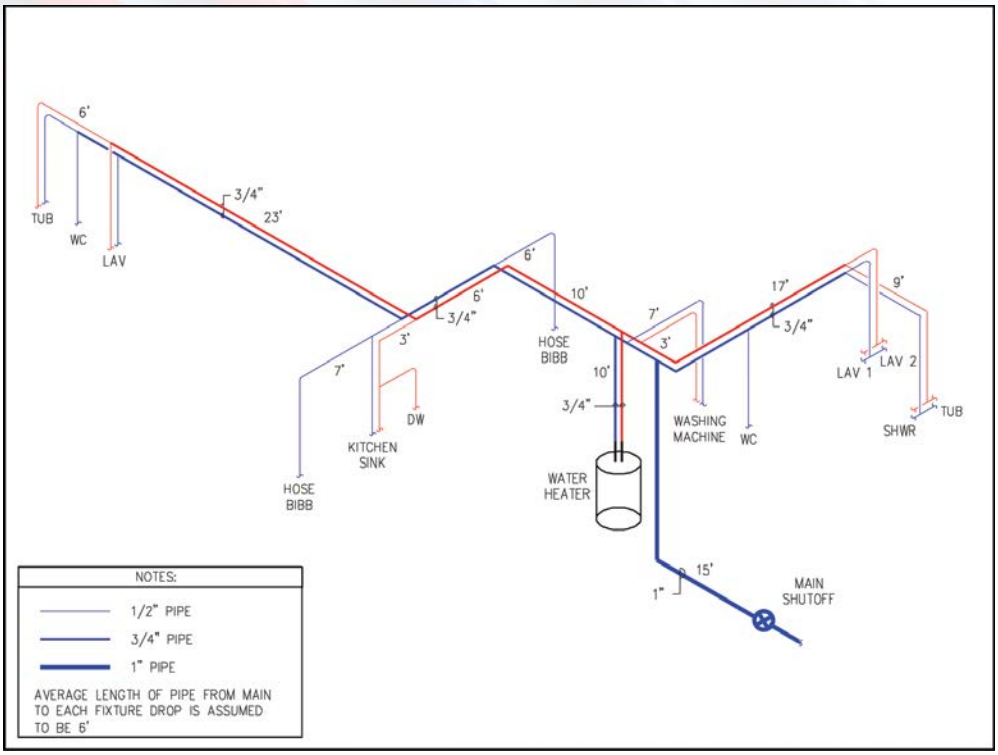

Figure 7.4 – Trunk and Branch Isometric Riser for the Ranch House

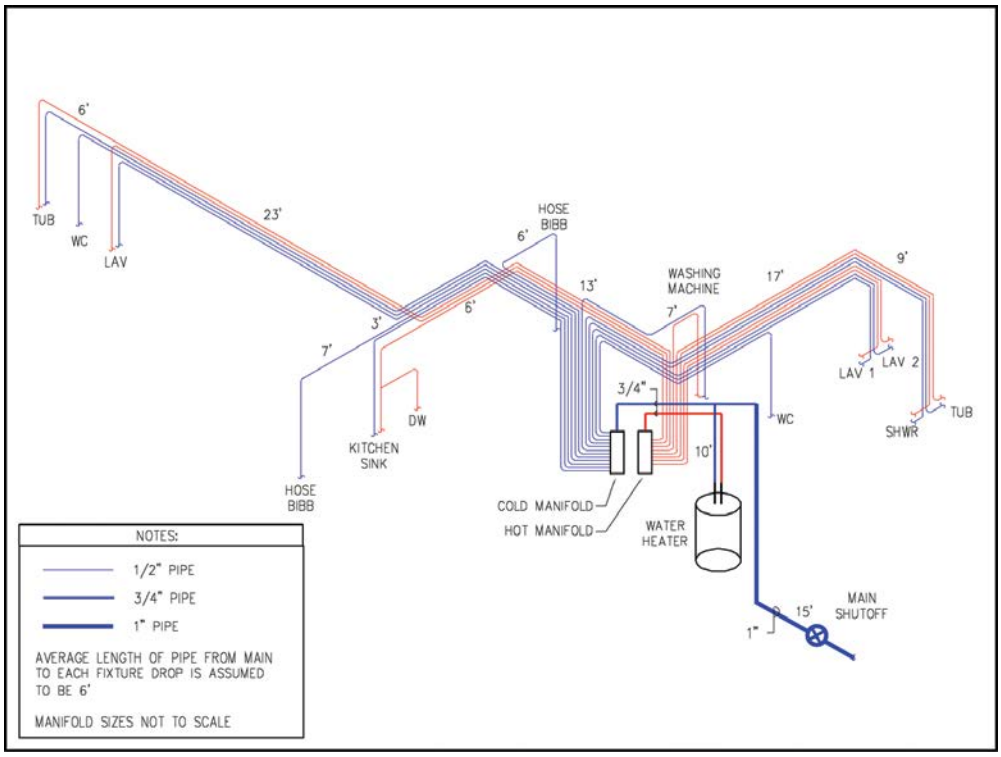

Figure 7.5 – Parallel Isometric Riser for the Ranch House

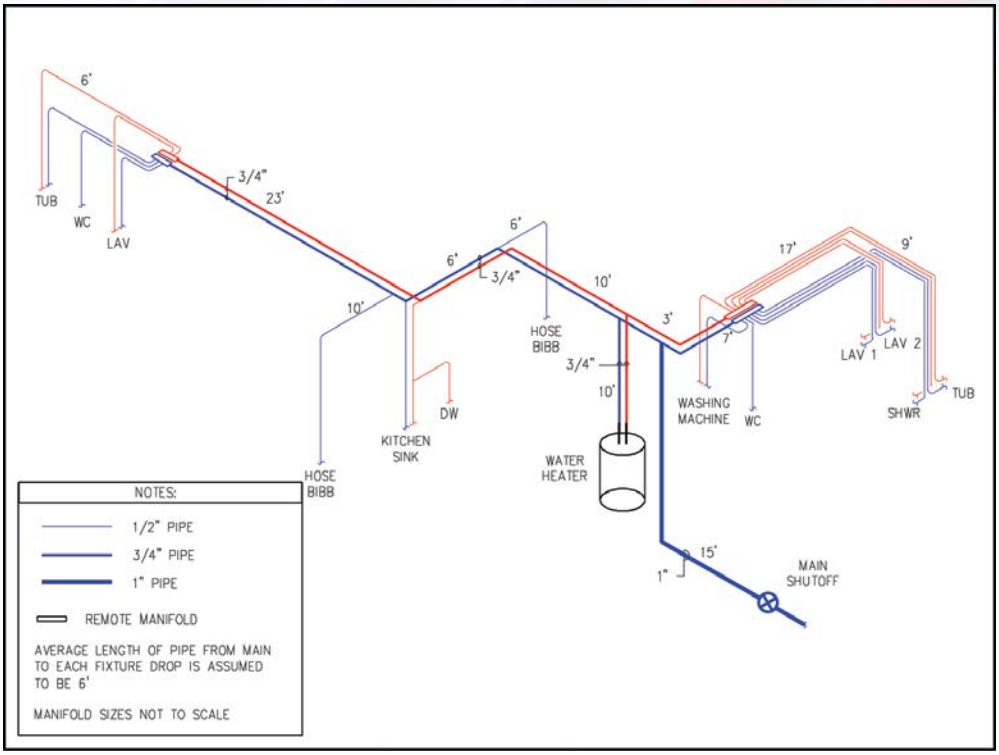

Figure 7.6 – Zone Isometric Riser for the Ranch House

Townhouse Layout

The Townhouse has two stories and is approximately 1,000 square feet of floor area. The water main enters the house under the first floor's slab on grade. The first floor has a living room, kitchen, dining room, and a powder room. The second floor has two bedrooms and one full bath. The water heater and clothes washer are located on the first floor.

Table 7.7 – Fixture Summary for the Townhouse

Level	Kitchen Sink	Dishwasher	Lavatory	Water Closet	Shower/Tub	Clothes Washer	Utility Sink	Hose Bibb	Total
First Floor	1	1	1	1	0	1	0	2	**7**
Second Floor	0	0	1	1	1	0	0	0	**3**
Total	**1**	**1**	**2**	**2**	**1**	**1**	**0**	**2**	**10**

Table 7.8 – Material Summary for the Townhouse

System	Length of Cold Pipe			Length of Hot Pipe			Fittings		Manifolds/ Multi-port Tees		Joints	
	1"	3/4"	1/2"	1"	3/4"	1/2"	Tees	Elbows	Main	Remote	Fixtures	Piping
Trunk and Branch	0'	66'	86'	0'	30'	44'	14	8	0	0	15	59
Parallel	0'	42'	247'	0'	11'	138'	2	8	2	0	15	39
Zone	0'	67'	100'	0'	30'	44'	5	7	0	2	15	42

In this more compact house design, the differences between the trunk and branch and zone systems are primarily in reduced fittings and joints for the zone system. The parallel system uses considerably more pipe (1.9 times more on average) as the trunk and branch and zone designs. The parallel system uses more piping with smaller diameters, which is easier to handle and install, particularly around bends. An appropriate balance between labor and material costs as well as the relative performance of the systems is important when deciding on a system layout for your particular house.

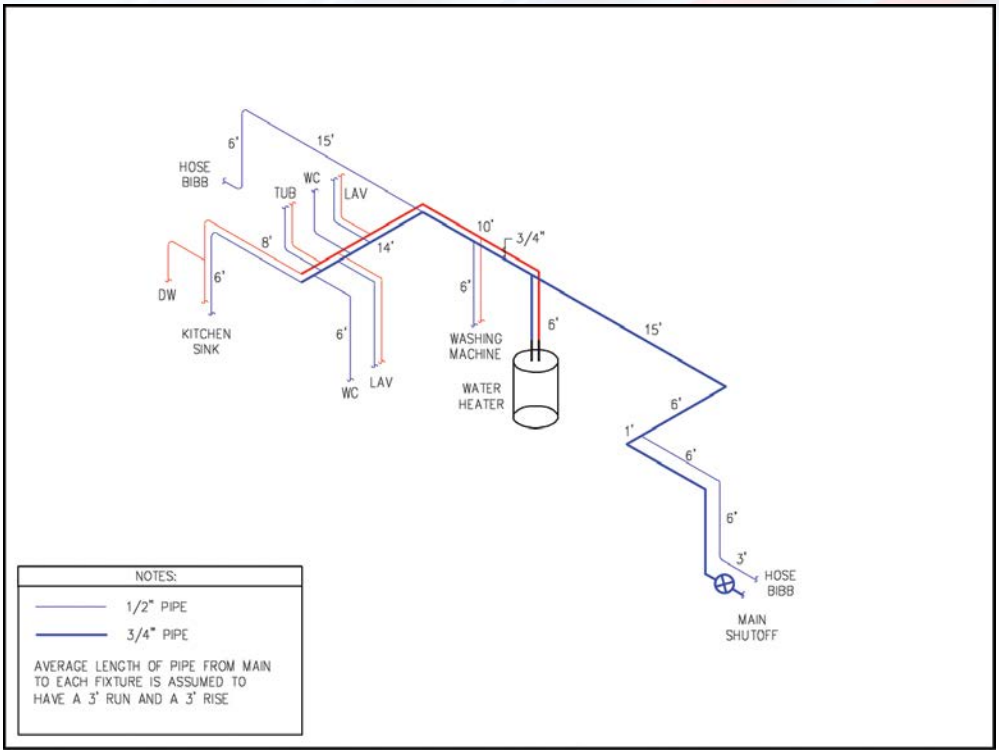

Figure 7.7 – Trunk and Branch Isometric Riser for the Townhouse

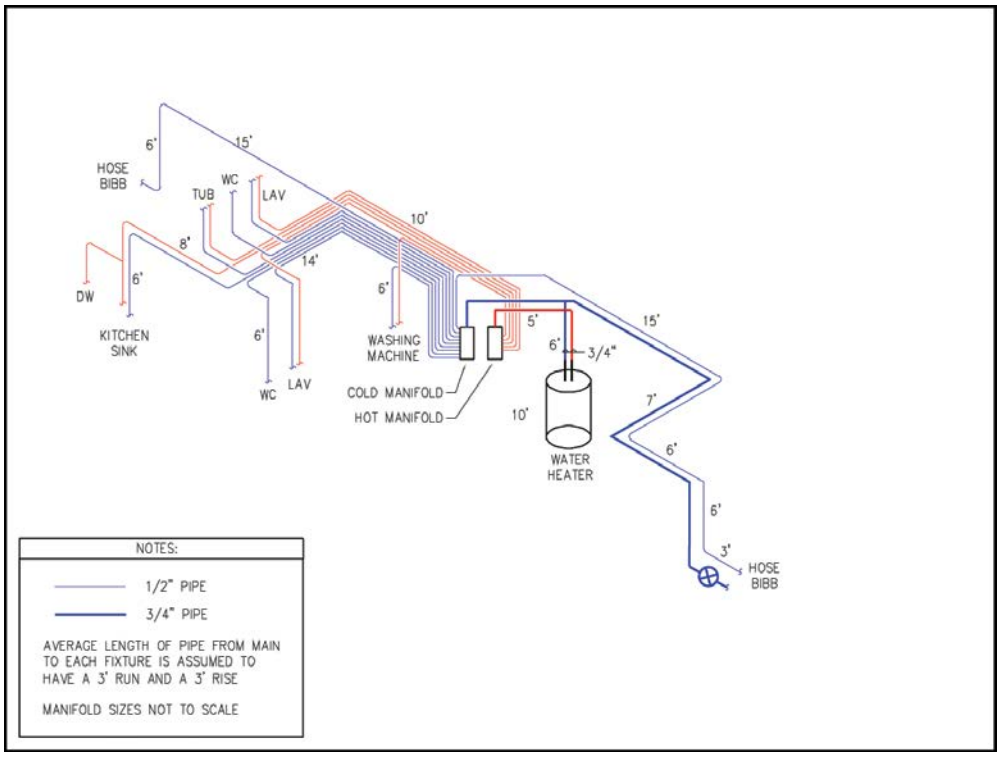

Figure 7.8 – Parallel Isometric Riser for the Townhouse

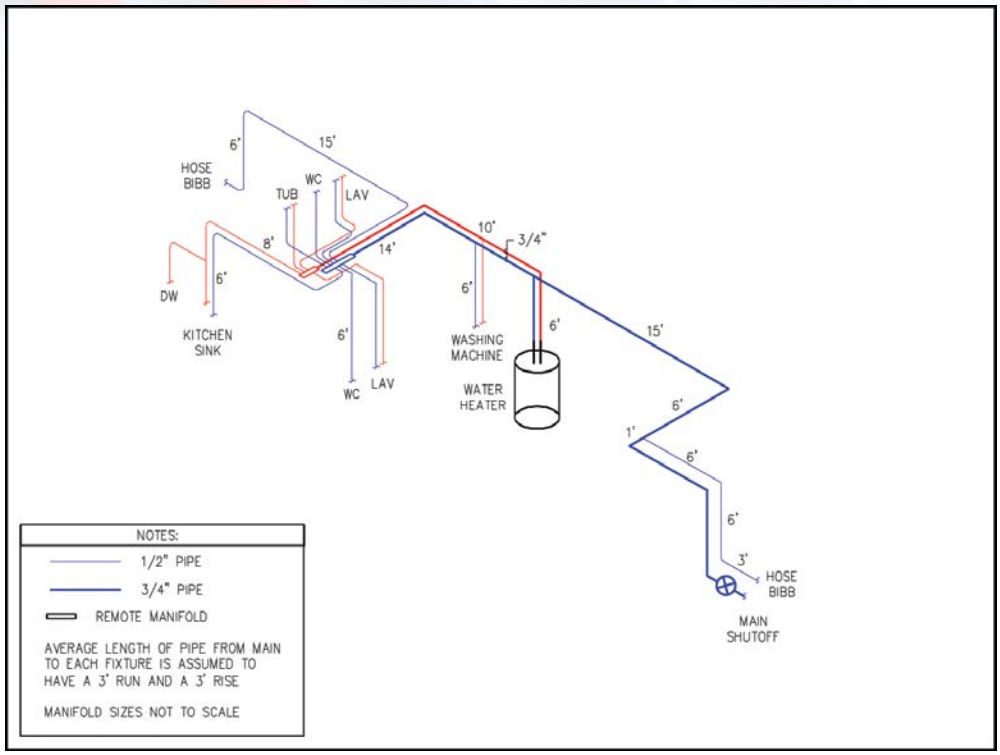

Figure 7.9 – Zone Isometric Riser for the Townhouse

Condominium Layout

The Condominium has approximately 1,200 square feet of floor area. It has a living room, kitchen, dining room, two bedrooms, and two full baths. The clothes washer is located in the unit. The condominium building has a central plant for water heating; therefore, there is no water heater located in the unit.

Table 7.9 – Fixture Summary for the Condominium

Level	Kitchen Sink	Dishwasher	Lavatory	Water Closet	Shower/Tub	Clothes Washer	Utility Sink	Hose Bibb	Total
Main Floor	1	1	3	2	3	1	0	0	**11**

Table 7.10 – Material Summary for the Condominium

System	Length of Cold Pipe			Length of Hot Pipe			Fittings		Manifolds/ Multi-port Tees		Joints	
	1"	3/4"	1/2"	1"	3/4"	1/2"	Tees	Elbows	Main	Remote	Fixtures	Piping
Trunk and Branch	0'	45'	120'	0'	45'	104'	17	0	0	0	19	53
Parallel	0'	10'	295'	0'	10'	242'	1	2	2	0	19	29
Zone	0'	35'	132'	0'	35'	115'	5	0	0	4	19	37

The trunk and branch system uses the most tees which increases the number of joints. The trunk and branch and zone system layouts are similar in pipe use, but the zone system uses fewer fittings resulting in fewer joints. The parallel system uses the most pipe (1.8 times more on average) and the least amount of fittings. The parallel system uses more pipe with smaller diameters, which is easier to handle and install, particularly around bends. An appropriate balance between labor and material costs as well as the relative performance of the systems is important when deciding on a system layout for your particular house.

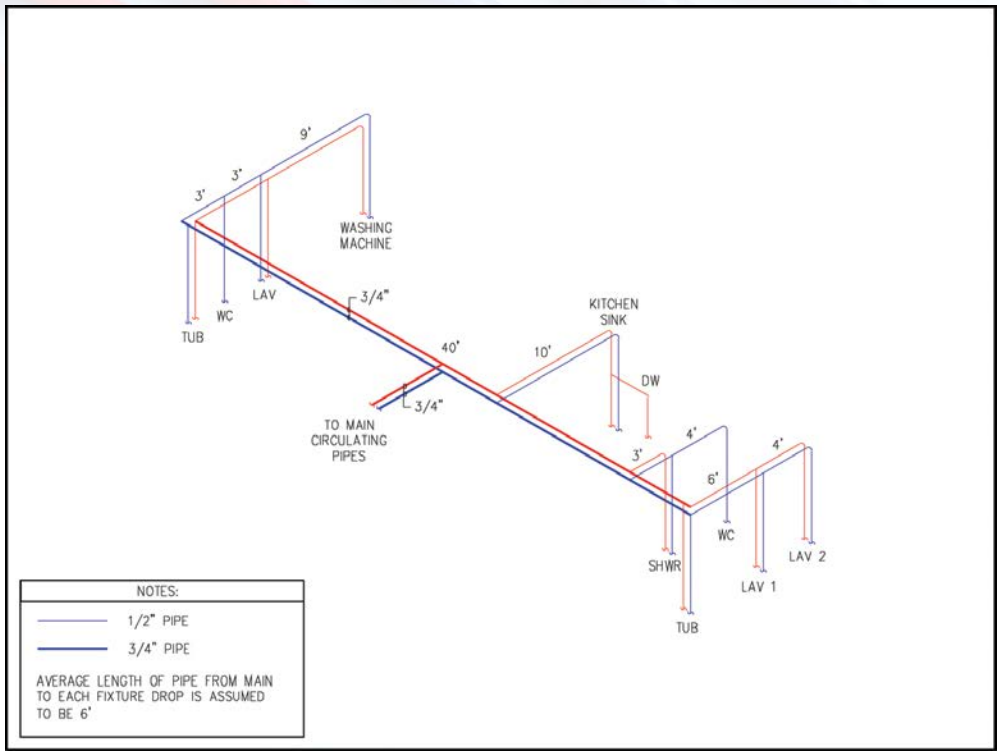

Figure 7.10 – Trunk and Branch Isometric Riser for the Condominium

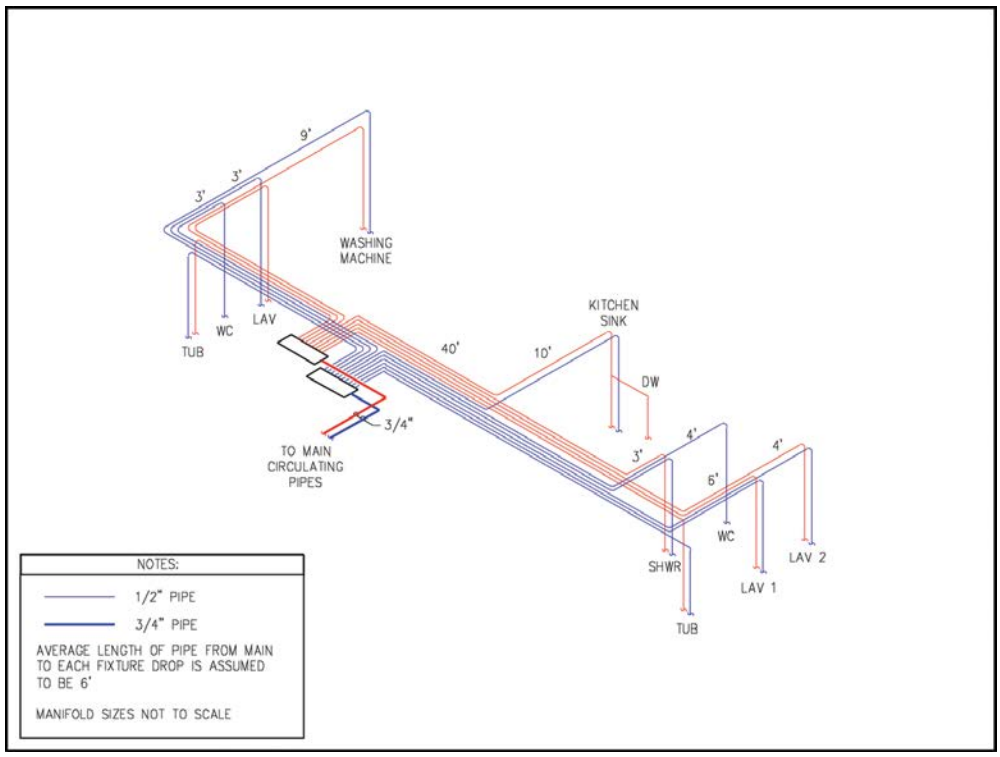

Figure 7.11 – Parallel Isometric Riser for the Condominium

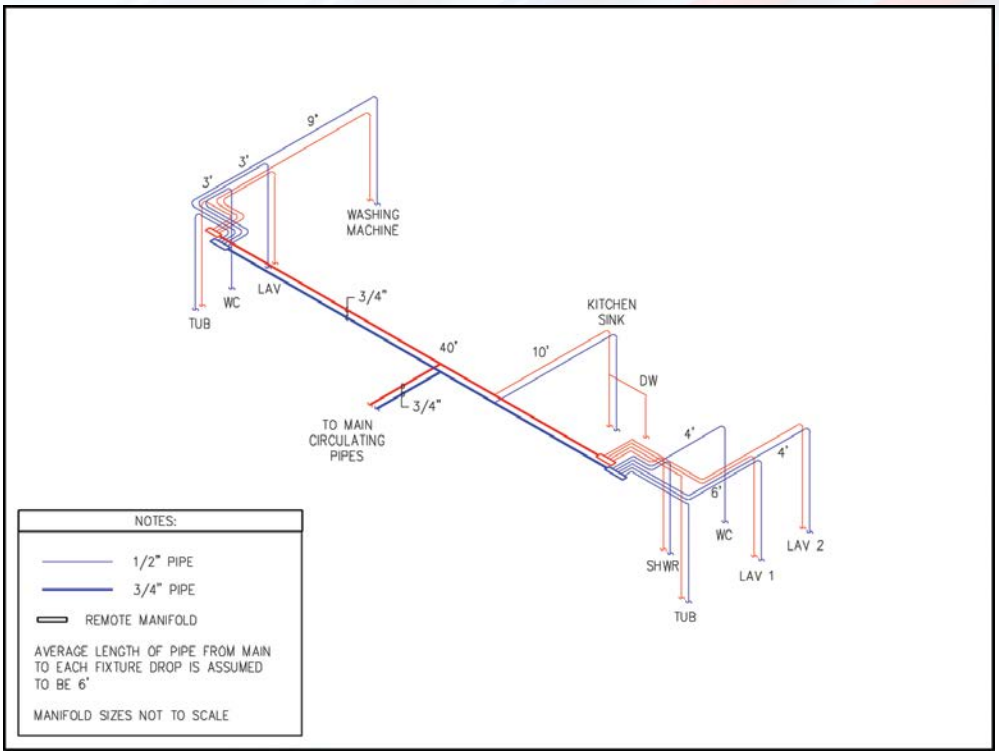

Figure 7.12 – Zone Isometric Riser for the Condominium

Table 7.11 – PEX Pipe Dimensions

Nominal Diameter	OD inches[1]	Wall inches[2]	ID inches	Weight lb/ft	Volume[3] gallon/100ft
3/8"	0.500	0.075	0.350	0.04	0.5
1/2"	0.625	0.075	0.475	0.05	1.0
5/8	0.750	0.083	0.574	0.07	1.3
3/4"	0.875	0.102	0.671	0.10	1.9
1"	1.125	0.132	0.862	0.17	3.2
1 1/4"	1.375	0.161	1.054	0.25	4.7
1 1/2"	1.625	0.191	1.244	0.35	6.5
2"	2.125	0.248	1.629	0.60	11.1

[1] Average OD from ASTM F 876
[2] Average wall thickness from ASTM F 876
[3] Typical pipe volumes in US gallons, not imperial

Performance Verification Laboratory Testing

A set of laboratory tests using typical plumbing fixtures and plumbing pipe sizes, runs and fittings was performed to demonstrate the flow characteristics of the three different PEX systems. Results of this testing indicate that all three systems will supply adequate pressure and water delivery to a remote shower fixture located 100 feet from the base riser with an elevation head of 15 feet. Base source pressures of 40, 60, and 80 psi were used in each of the different system designs. Multiple tests were performed to add simultaneous flows from other fixtures including a shower, lavatory, kitchen and water closet. Test results are shown in Chapter 8.

Industry Technical Support

If you have questions that have not been answered in this Design Guide, you can contact the PEX manufacturer directly. The following websites provide a wealth of general information on PEX piping.

Plastics Pipe Institute
www.plasticpipe.org

Plastic Pipe and Fittings Association
www.ppfahome.org

Home Innovation Labs
www.HomeInnovation.com

Manufacturers of PEX piping and fittings can also provide specific technical assistance during the design, planning, and installation phases. Contact information for each can be found at the PPI and PPFA and websites and on the individual manufacturers' sites.

Plan Pipe Routing, Manifold/Multi-port Tee, and Valve Locations

Once the system design is selected, the final step in the design process is to plan pipe routing, manifold/multi-port tee, and valve locations. As in the case of the home design optimization, there are several guidelines that can simplify this process. Bear in mind that PEX piping is available in continuous coils as well as 20-foot straight lengths. Consult the local codes for specific installation requirements for your project.

Guidelines for optimizing the design of a PEX plumbing system include:

1. **Minimize fittings –** The flexibility of PEX piping enables it to be easily installed around obstructions and through framing members. Use of sweep turns (i.e., bending the pipe in a gentle sweep rather than using solid fittings) to change direction can result in quicker installations, fewer mechanical fittings, and less resistance due to pressure drops common through fittings.
2. **Group fixtures together –** If using trunk and branch or zone, use common trunk lines to feed multiple fixture groups. For example, if two bathrooms are stacked, use a single zone/multi-port tee to feed both, rather than two zones/multi-port tee.
3. **Minimize pipe lengths –** Though this may seem intuitive, attention to this detail should lead to efficiently installed plumbing systems, especially when considering plumbing layouts using PEX piping.

4. **Select appropriate pipe diameter –** Many plumbing systems are installed using standard practices that apply to very large homes but are excessive for smaller homes. Taking a short amount of time to plan the piping sizes needed to supply the proper flow rates at the required pressure, will result in the use of pipe sizes that deliver the required fixture flow rate, but are not oversized. Oversized plumbing system designs result in wasted energy and water, as well as reduce customer satisfaction with the plumbing system.
5. **Bundle pipe runs –** Applicable particularly to PEX plumbing runs where few fittings are installed, installation of multiple piping runs at the same time will reduce installation time. The flexibility of PEX piping and the long unbroken lengths that can be easily spooled to enable the simultaneous installation of multiple plumbing lines running in the same direction using common holes through barriers such as joists.
6. **Plan for solid attachment of transition points –** The flexibility of PEX piping also requires that the transition to threaded fittings or rigid piping be performed correctly. As with most piping materials, solid connection points and solid attachment points are necessary when threading on valves and transition fittings to other materials.
7. **Use color coding –** PEX is available in different colors. Using dedicated colors for hot, cold, and greywater, where applicable, can be helpful for installers, homeowners, and future retrofits.

Before locating manifolds, determine whether valves will be placed at fixtures or on manifolds. Some jurisdictions require valves at the fixture, while others allow them to be located on central manifolds. In some cases the homeowner may express a preference for the location of shut-off valves. If valves are to be placed on manifolds, they must be situated to allow easy access. This can be accomplished by placing them behind access panels, or open in basements, laundry rooms, mechanical rooms, or garages where no freeze potential exists. It is also important to label each valve on the manifold to ensure easy identification of the distribution lines. If valves are not placed on the manifolds, and local codes allow, the manifolds may be enclosed within walls or floors, similar to any other fitting such as a tee or ell.

Table 7.12 – Flow Velocity								
Flow Rate	Flow Velocity ft/sec							
GPM	3/8"	1/2"	5/8"	3/4"	1"	1 1/4"	1 1/2"	2"
0.5	1.67	0.91	0.62	0.45	0.27	0.18	0.13	0.08
0.75	2.50	1.36	0.93	0.68	0.41	0.28	0.20	0.12
1.0	3.33	1.81	1.24	0.91	0.55	0.37	0.26	0.15
1.5	5.00	2.72	1.86	1.36	0.82	0.55	0.40	0.23
2.0	6.67	3.62	2.48	1.81	1.10	0.74	0.53	0.31
2.5	8.34	4.53	3.10	2.27	1.37	0.92	0.66	0.38
3.0	10.00	5.43	3.72	2.72	1.65	1.10	0.79	0.46
3.5	11.67	6.34	4.34	3.18	1.92	1.29	0.92	0.54
4.0		7.24	4.96	3.63	2.20	1.47	1.06	0.62
4.5		8.15	5.58	4.08	2.47	1.65	1.19	0.69
5.0		9.05	6.20	4.54	2.75	1.84	1.32	0.77
6.0		10.86	7.44	5.44	3.30	2.21	1.58	0.92
7.0			8.68	6.35	3.85	2.57	1.85	1.08
8.0			9.92	7.26	4.40	2.94	2.11	1.23
9.0			11.16	8.17	4.95	3.31	2.38	1.39
10.0				9.07	5.50	3.68	2.64	1.54
11.0				9.98	6.05	4.04	2.90	1.69
12.0				10.89	6.60	4.41	3.17	1.85
13.0				11.79	7.15	4.78	3.43	2.00
14.0					7.70	5.15	3.70	2.16
15.0					8.25	5.52	3.96	2.31
16.0					8.80	5.88	4.22	2.46
17.0					9.35	6.25	4.49	2.62
18.0					9.90	6.62	4.75	2.77
19.0					10.45	6.99	5.02	2.92
20.0					11.00	7.35	5.28	3.08
25.0						9.19	6.60	3.85
30.0						11.03	7.92	4.62
35.0							9.24	5.39

Table 7.12 – Flow Velocity *(continued)*								
Flow Rate	Flow Velocity ft/sec							
GPM	3/8"	1/2"	5/8"	3/4"	1"	1 1/4"	1 1/2"	2"
40.0							10.65	6.16
45.0							11.88	6.93
50.0								7.70
55.0								8.47
60.0								9.24
65.0								10.01
70.0								10.78
75.0								11.55

Table 7.13 – Pressure Loss								
60°F (16°C) Water								
Flow Rate	Pressure Loss psi/100 ft of Pipe							
GPM	3/8"	1/2"	5/8"	3/4"	1"	1 1/4"	1 1/2"	2"
0.5	1.95	0.44	0.18	0.08	0.02	0.01	0.00	0.00
0.75	4.14	0.94	0.37	0.17	0.05	0.02	0.01	0.00
1.0	7.05	1.59	0.63	0.30	0.09	0.03	0.01	0.00
1.5	14.93	3.38	1.35	0.63	0.19	0.07	0.03	0.01
2.0	25.44	5.76	2.29	1.07	0.32	0.12	0.05	0.01
2.5	38.45	8.70	3.46	1.62	0.48	0.18	0.08	0.02
3.0	53.90	12.20	4.86	2.27	0.67	0.25	0.11	0.03
3.5	71.70	16.23	6.46	3.02	0.89	0.34	0.15	0.04
4.0		20.78	8.27	3.87	1.14	0.43	0.19	0.05
4.5		25.85	10.29	4.81	1.42	0.53	0.24	0.06
5.0		31.41	12.51	5.85	1.73	0.65	0.29	0.08
6.0		44.03	17.53	8.20	2.42	0.91	0.41	0.11
7.0			23.32	10.91	3.22	1.21	0.54	0.15
8.0			29.86	13.97	4.13	1.55	0.69	0.19
9.0			37.14	17.38	5.14	1.93	0.86	0.23
10.0				21.12	6.24	2.35	1.05	0.28

Table 7.13 – Pressure Loss *(continued)*								
60°F (16°C) Water								
Flow Rate	Pressure Loss psi/100 ft of Pipe							
GPM	3/8"	1/2"	5/8"	3/4"	1"	1 1/4"	1 1/2"	2"
11.0				25.20	7.45	2.80	1.25	0.34
12.0				29.60	8.75	3.29	1.47	0.40
13.0				34.33	10.15	3.81	1.70	0.46
14.0					11.64	4.38	1.95	0.53
15.0					13.23	4.97	2.22	0.60
16.0					14.91	5.60	2.50	0.67
17.0					16.68	6.27	2.80	0.75
18.0					18.54	6.97	3.11	0.84
19.0					20.49	7.70	3.44	0.93
20.0					22.54	8.47	3.78	1.02
25.0						12.81	5.72	1.54
30.0						17.95	8.01	2.16
35.0							10.66	2.87
40.0							13.65	3.68
45.0							13.98	4.57
50.0								4.56
55.0								6.63
60.0								7.79
65.0								9.04
70.0								10.37
75.0								11.78
Shown is pressure loss in units of psi per 100 feet of pipe.								

GLOSSARY

ASTM: American Society for Testing and Materials

Corrosion: deterioration in metals caused by oxidation or chemical action

Crosslinked polyethylene: a polyethylene material which has undergone a change in molecular structure using a chemical or a physical process whereby the polymer chains are chemically linked. Crosslinking of polyethylene into PEX for pipes results in improved properties such as elevated temperature strength and performance, chemical resistance, and resistance to slow crack growth.

Elasticity: a measure of material stiffness or the ability of the material to stretch or deform temporarily under a load

Fitting: a device or connection that allows the PEX pipe to change direction or size, such as a tee, elbow, or coupling

Fixture: a device or appliance at the end of a water supply distribution pipe line. Example: lavatory, water closet, tub/shower, dishwasher

IAPMO: International Association of Plumbing and Mechanical Officials

ICC: International Code Council

IPC: International Plumbing Code

IRC: International Residential Code

Joint: the connection of the PEX pipe to a fitting, fixture, or manifold

Manifold: a device having a series of ports that are used to connect distribution lines for several fixtures

NSPC: National Standard Plumbing Code

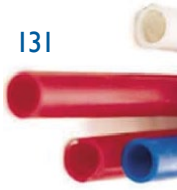

Outlet: see fixture

Parallel: a plumbing design that utilizes a central manifold and distribution piping to each hot and cold water fixture

pH: a scale ranging from 0 to 14 that ranks how acidic or alkaline a liquid is; water with a pH below 7 is considered acidic and water with a pH above 7 is considered alkaline

PPFA: Plastic Pipe and Fittings Association

PPI: Plastics Pipe Institute

Scaling: process of mineral buildup on the interior of a pipe

Test fixture: the tub-shower unit farthest from the water source that was instrumented to measure flow rate, flowing pressure, and mixed water temperature in the lab tests

Thermoplastic: having the property of becoming soft when heated and hard when cooled

Thermoset: having the property of becoming permanently hard and rigid when heated or cured

Trunk and branch: a plumbing design that has a large main line that feeds smaller pipes to each fixture

Ultraviolet: high energy light waves found in sunlight that lead to the degradation of many plastics and materials (UV)

UPC: Uniform Plumbing Code

Wait time: the time it takes for hot water to be delivered to the Test Fixture; delivery time

Water hammer: a banging noise heard in a water pipe following an abrupt alteration of the flow with resultant pressure surges

Zone: a plumbing system that uses trunk lines from the water source to small manifolds at grouped fixtures, such as a bathroom; can be flow-through or closed end